Agilent Technologies
Innovating the HP Way

# Low Noise, Cascadable Silicon Bipolar MMIC Amplifier

## Technical Data

**INA-02170**

### Features

- **Cascadable 50 Ω Gain Block**
- **Low Noise Figure:**
  2.0 dB Typical at 0.5 GHz
- **High Gain:**
  31.5 dB Typical at 0.5 GHz
  25.0 dB Typical at 1.5 GHz
- **3 dB Bandwidth:**
  DC to 1.0 GHz
- **Unconditionally Stable (k>1)**
- **Hermetic Gold-Ceramic Surface Mount Package**

### Description

The INA-02170 is a low noise silicon bipolar Monolithic Microwave Integrated Circuit (MMIC) feedback amplifier housed in a hermetic, high reliability package. It is designed for narrow or wide bandwidth industrial and military applications that require high gain and low noise IF or RF amplification.

The INA series of MMICs is fabricated using Agilent's 10 GHz $f_T$, 25 GHz $f_{MAX}$, ISOSAT™-I silicon bipolar process which uses nitride self-alignment, submicrometer lithography, trench isolation, ion implantation, gold metallization and polyimide intermetal dielectric and scratch protection to achieve excellent performance, uniformity and reliability.

### 70 mil Package

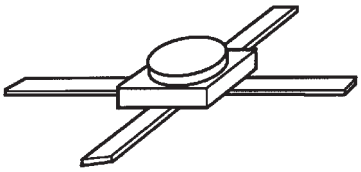

### Typical Biasing Configuration

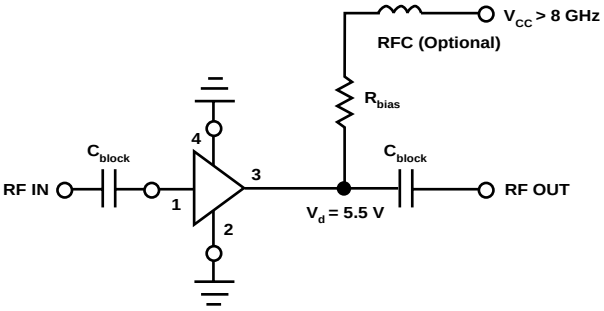

## INA-02170 Absolute Maximum Ratings

| Parameter | Absolute Maximum[1] |
|---|---|
| Device Current | 50 mA |
| Power Dissipation[2,3] | 400 mW |
| RF Input Power | +13 dBm |
| Junction Temperature | 200°C |
| Storage Temperature | –65 to 200°C |

**Thermal Resistance[2,4]:**
$\theta_{jc}$ = 140°C/W

**Notes:**
1. Permanent damage may occur if any of these limits are exceeded.
2. $T_{CASE}$ = 25°C.
3. Derate at 7.1 mW/°C for $T_C$ > 144°C.
4. See MEASUREMENTS section "Thermal Resistance" for more information.

## INA-02170 Electrical Specifications[1], $T_A$ = 25°C

| Symbol | Parameters and Test Conditions: $I_d$ = 35 mA, $Z_O$ = 50 Ω | | Units | Min. | Typ. | Max. |
|---|---|---|---|---|---|---|
| $G_P$ | Power Gain ($\|S_{21}\|^2$) | f = 0.5 GHz | dB | 29.0 | 31.5 | 34.0 |
| $\Delta G_P$ | Gain Flatness | f = 0.01 to 1.0 GHz | dB | | ±1.5 | |
| $f_{3\ dB}$ | 3 dB Bandwidth[2] | | GHz | | 1.0 | |
| ISO | Reverse Isolation ($\|S_{12}\|^2$) | f = 0.01 to 1.0 GHz | dB | | 39 | |
| VSWR | Input VSWR | f = 0.01 to 1.0 GHz | | | 1.4:1 | |
| | Output VSWR | f = 0.01 to 1.0 GHz | | | 1.5:1 | |
| NF | 50 Ω Noise Figure | f = 0.5 GHz | dB | | 2.0 | 2.5 |
| $P_{1\ dB}$ | Output Power at 1 dB Gain Compression | f = 0.5 GHz | dBm | | 11 | |
| $IP_3$ | Third Order Intercept Point | f = 0.5 GHz | dBm | | 23 | |
| $t_D$ | Group Delay | f = 0.5 GHz | psec | | 350 | |
| $V_d$ | Device Voltage | | V | 4.0 | 5.5 | 7.0 |
| dV/dT | Device Voltage Temperature Coefficient | | mV/°C | | +10 | |

**Notes:**
1. The recommended operating current range for this device is 30 to 40 mA. Typical performance as a function of current is on the following page.
2. Referenced from 10 MHz Gain ($G_P$).

## INA-02170 Typical Scattering Parameters ($Z_O$ = 50 Ω, $T_A$ = 25°C, $I_d$ = 35 mA)

| Freq. | $S_{11}$ | | $S_{21}$ | | | $S_{12}$ | | | $S_{22}$ | | |
|---|---|---|---|---|---|---|---|---|---|---|---|
| GHz | Mag | Ang | dB | Mag | Ang | dB | Mag | Ang | Mag | Ang | k |
| 0.01 | .05 | –8 | 32.5 | 42.32 | –2 | –39.2 | .011 | 14 | .19 | –1 | 1.26 |
| 0.05 | .05 | –31 | 32.5 | 42.32 | –7 | –38.9 | .011 | 14 | .19 | –5 | 1.26 |
| 0.10 | .06 | –85 | 32.5 | 42.05 | –14 | –38.0 | .013 | 10 | .19 | –10 | 1.15 |
| 0.20 | .09 | –110 | 32.3 | 41.06 | –27 | –38.8 | .011 | 5 | .18 | –16 | 1.29 |
| 0.30 | .12 | –129 | 32.0 | 39.82 | –40 | –38.8 | .011 | 1 | .17 | –21 | 1.32 |
| 0.40 | .15 | –140 | 31.7 | 38.43 | –53 | –40.2 | .010 | 19 | .16 | –25 | 1.45 |
| 0.50 | .17 | –151 | 31.4 | 37.08 | –65 | –40.0 | .010 | 8 | .16 | –27 | 1.48 |
| 0.60 | .17 | –159 | 31.0 | 35.49 | –77 | –39.6 | .011 | 23 | .16 | –30 | 1.43 |
| 0.80 | .18 | –174 | 30.2 | 32.45 | –101 | –38.2 | .012 | 23 | .16 | –40 | 1.43 |
| 1.00 | .19 | 179 | 29.2 | 28.70 | –126 | –38.2 | .012 | 17 | .16 | –53 | 1.55 |
| 1.20 | .19 | 173 | 27.8 | 24.51 | –149 | –37.5 | .013 | 27 | .15 | –71 | 1.66 |
| 1.40 | .20 | 166 | 26.1 | 20.18 | –171 | –36.2 | .015 | 35 | .14 | –102 | 1.73 |
| 1.60 | .21 | 162 | 24.2 | 16.26 | 170 | –36.3 | .015 | 34 | .12 | –172 | 2.07 |
| 1.80 | .22 | 159 | 22.3 | 13.02 | 153 | –34.1 | .020 | 46 | .10 | 144 | 1.94 |
| 2.00 | .23 | 155 | 20.4 | 10.45 | 139 | –33.0 | .022 | 37 | .07 | 117 | 2.17 |
| 2.50 | .25 | 150 | 16.7 | 6.82 | 112 | –33.3 | .022 | 32 | .05 | 95 | 3.19 |
| 3.00 | .29 | 144 | 13.1 | 4.51 | 87 | –31.8 | .026 | 32 | .04 | 78 | 3.96 |

## INA-02170 Typical Performance, $T_A$ = 25°C

(unless otherwise noted)

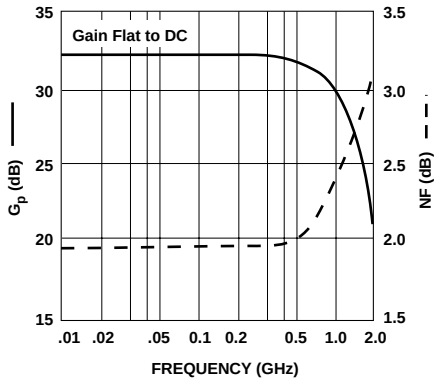


**Figure 1. Typical Gain and Noise Figure vs. Frequency, $T_A$ = 25°C, $I_d$ = 35 mA.**

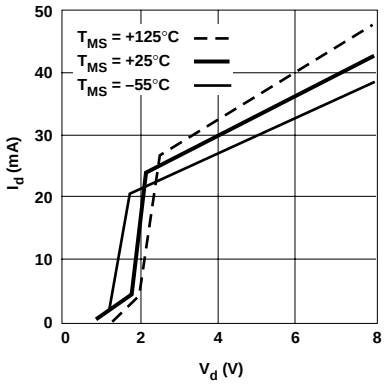


**Figure 2. Device Current vs. Voltage.**

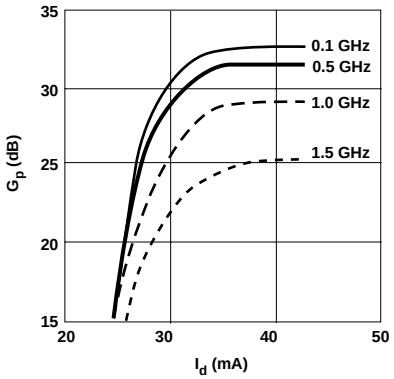


**Figure 3. Power Gain vs. Current.**

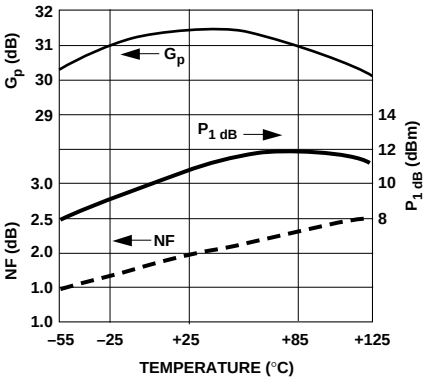


**Figure 4. Output Power and 1 dB Gain Compression, NF and Power Gain vs. Case Temperature, f = 0.1 GHz, $I_d$ = 35 mA.**

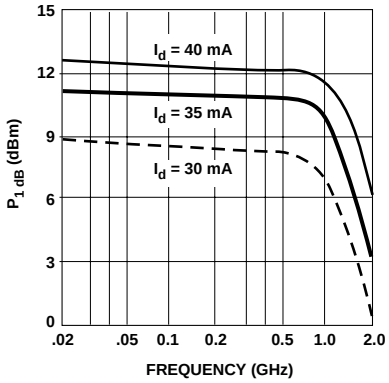


**Figure 5. Output Power at 1 dB Gain Compression vs. Frequency.**

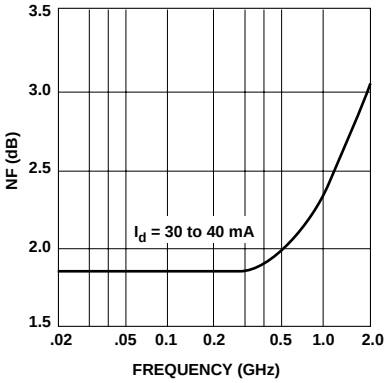


**Figure 6. Noise Figure vs. Frequency.**

Agilent Technologies
Innovating the HP Way

## 70 mil Package Dimensions

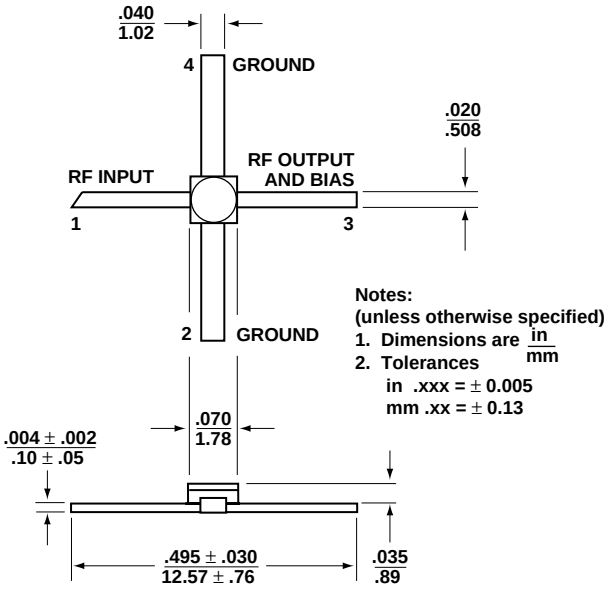


*www.semiconductor.agilent.com*
Data subject to change.
Copyright © 1999 Agilent Technologies
Obsoletes 5965-9674E
5966-4957E (11/99)